电容降压专用金属化聚丙烯膜交流电容器（X2类）
Metallized polypropylene film A.C. capacitor for capacitive divider(Class X2)

■ 外形图 Outline Drawing

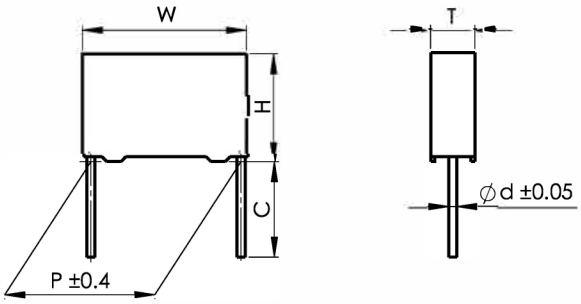

w±0.4 H±0.4 T±0.4

■ 特点

- 专门设计用于与100Vac～240Vac电源串联的电容降压电路场合，如电表、LED模块等
- 金属化聚丙烯
- 自愈性能优异，能承受浪涌电压冲击
- 长期负载下优异的电容量稳定性
- 优异的防潮性能
- 优异的阻燃性能

■ Features

- This is specifically designed for applications in serial with the 100Vac～240Vac main, i.e.: capacitive divider, for example, energy meter, LED driver etc
- Metallized polypropylene structure
- Good self-healing properties,withstanding surge voltage stressing
- Long stability of capacitance
- Good properties in damp environment
- Excellent active and passive flame resistant abilities

■ 安全认证 Safety Approvals

●	CQC	CQC (中国)	
●	EN 10 DVE	ENEC-VDE (欧盟)	
●	c US	UL/CUL (美国/加拿大)	
●	KC	KC (韩国)	

■ 技术要求 Specifications

引用标准 Reference Standard	GB/T 6346.14 (IEC 60384–14)	
电容器类别 Class	X2 类	
气候类别 / 阻燃等级 Climatic Category/Passive Flammability Category	40/110/56/B	
工作温度范围 Operating Temperature Range	–40℃ ~ +110℃	
额定电压 Rated Voltage (U_R)	305Vac, 50/60Hz	
电容量范围 Capacitance Range	0.010μF ~ 2.2μF (可按要求制作其他电容量) (available on request)	
电容量偏差 Capacitance Tolerance	±10%（K），±20%（M） (Other tolerance available on request)	
耐电压 Voltage Proof	引线之间 Between Terminals:	4.3U_R(dc), 2s
	极壳之间 Between Terminals To Case:	2 120Vac, 1min
承受的脉冲电压 Endure impulse voltage	2 500V	
绝缘电阻 Insulation Resistance	R ≥ 15 000MΩ, C_N ≤ 0.33μF RC_N ≥ 5 000s, C_N > 0.33μF (20℃ ,100V, 1min)	
损耗角正切 Dissipation Factor (tan δ)	≤ 10 x 10^{-4}(1kHz,20℃) 典型值 Typical value 3 x 10^{-4}	
	≤ 20 x 10^{-4}(10kHz,20℃) 典型值 Typical value 8 x 10^{-4}	

产品编码说明 Part number system

■ 18位产品代码如下：
The 18 digits part number is formed as follow:

1	2	3	4	5	6	7	8	9	10	11	12	13	14	15	16	17	18
C	4	2								E							

第1~3位	型号代码	Digit 1 to 3	Series code
	C42=MKP62		C42=MKP62
第4~5位	交流额定电压	Digit 4 to 5	AC rated voltage
	Q2=305V		Q2=305V
第6~8位	标称容量	Digit 6 to 8	Rated capacitance value
	举例：474=47×10^4pF=0.47μF		For example: 474=47×10^4pF=0.47μF
第9位	容量等级	Digit 9	Capacitance tolerance
	K=±10% M=±20%		K=±10%, M=±20%
	N=0 ~ +10% 1=+4% ~ +14%		N=0 ~ +10% 1=+4% ~ +14%
	2= 0 ~ −10% 3=−5% ~ −14%		2= 0 ~ −10% 3=−5% ~ −14%
第10位	引线脚距P	Digit 10	Pitch
	4=10.0mm 6=15.0mm 9=22.5mm B=27.5mm		4=10.0mm 6=15.0mm 9=22.5mm B=27.5mm
第11位	内部特征码	Digit 11	Internal use
第12~15位	引线形状和包装代码	Digit 12 to 15	Lead form and packaging code
第16~18位	内部特征码	Digit 16 to 18	Internal use

■ Table 1 引线形状和包装代码 lead form and packaging code

第 12 位 Digit 12		第 13 位和第 14 位 Digit 13 and 14		第 15 位 Digit 15	
代码 Code	说明 explanation	代码 Code	说明 explanation	代码 Code	说明 explanation
C	直脚 straight lead "C" in the figure above	00 45	标准的引线长度 (18mm ~ 26mm) standard lead length 引线长度 4.5mm lead length 4.5mm	0	引线长度偏差 ±0.5mm 或标准长度 Length tolerance ±0.5mm Or standard length

■ 外形尺寸 Dimensions（mm）

305Vac								
C_N (μF)	tolerance	marking	W	H	T	P	d	Part number
0.010	±5%	K	13.0	9.0	4.0	10.0	0.6	C42Q2103K4E****+++
0.022	±5%	K	13.0	11.0	5.0	10.0	0.6	C42Q2223K4E****+++
0.033	±5%	K	13.0	12.0	6.0	10.0	0.6	C42Q2333K4E****+++
0.047	±5%	K	13.0	12.0	6.0	10.0	0.6	C42Q2473K4E****+++
0.010	±5%	K	17.5	11.0	5.0	15.0	0.6	C42Q2103K6E****+++
0.015	±5%	K	17.5	11.0	5.0	15.0	0.6	C42Q2153K6E****+++
0.022	±5%	K	17.5	11.0	5.0	15.0	0.6	C42Q2223K6E****+++
0.033	±5%	K	17.5	11.0	5.0	15.0	0.6	C42Q2333K6E****+++
0.047	±5%	K	17.5	11.0	5.0	15.0	0.6	C42Q2473K6E****+++
0.068	±5%	K	17.5	12.0	6.0	15.0	0.6	C42Q2683K6E****+++
0.10	±5%	K	17.5	13.5	7.5	15.0	0.6	C42Q2104K6E****+++
0.15	±5%	K	17.5	14.5	8.5	15.0	0.6	C42Q2154K6E****+++
0.22	±5%	K	17.5	16.0	10.0	15.0	0.8	C42Q2224K6E****+++
0.33	±5%	K	17.5	19.0	11.0	15.0	0.8	C42Q2334K6E****+++
0.15	±5%	K	26.5	15.0	6.0	22.5	0.8	C42Q2154K9E****+++
0.18	±5%	K	26.5	16.0	7.0	22.5	0.8	C42Q2184K9E****+++
0.22	±5%	K	26.5	16.0	7.0	22.5	0.8	C42Q2224K9E****+++
0.27	±5%	K	26.5	17.0	8.5	22.5	0.8	C42Q2274K9E****+++
0.33	±5%	K	26.5	17.0	8.5	22.5	0.8	C42Q2334K9E****+++
0.39	±5%	K	26.5	18.5	10.0	22.5	0.8	C42Q2394K9E****+++
0.39	0 ~ +10%	K	26.5	18.5	10.0	22.5	0.8	C42Q2394N9E****+++
0.39	+4% ~ +14%	M	26.5	18.5	10.0	22.5	0.8	C42Q239419E****+++
0.47	–14% ~ –5%	M	26.5	18.5	10.0	22.5	0.8	C42Q247439E****+++
0.47	–10% ~ 0	K	26.5	20.0	11.0	22.5	0.8	C42Q247429E****+++
0.47	±5%	K	26.5	20.0	11.0	22.5	0.8	C42Q2474K9E****+++
0.47	0 ~ +10%	K	26.5	20.0	11.0	22.5	0.8	C42Q2474N9E****+++
0.56	±5%	K	26.5	18.5	10.0	22.5	0.8	C42Q2564K9E****+++
0.56	0 ~ +10%	K	26.5	18.5	10.0	22.5	0.8	C42Q2564N9E****+++
0.60	±5%	K	26.5	20.0	11.0	22.5	0.8	C42Q2604K9E****+++
0.68	±5%	K	26.5	20.0	11.0	22.5	0.8	C42Q2684K9E****+++
0.68	0 ~ +10%	K	26.5	20.0	11.0	22.5	0.8	C42Q2684N9E****+++
0.75	±5%	K	26.5	20.0	11.0	22.5	0.8	C42Q2754K9E****+++
0.82	±5%	K	26.5	22.0	12.0	22.5	0.8	C42Q2824K9E****+++
0.87	±5%	K	26.5	22.0	12.0	22.5	0.8	C42Q2874K9E****+++
0.91	±5%	K	26.5	22.0	12.0	22.5	0.8	C42Q2914K9E****+++
1.0	±5%	K	26.5	22.0	12.0	22.5	0.8	C42Q2105K9E****+++
0.39	±5%	K	32.0	18.0	9.0	27.5	0.8	C42Q2394KBE****+++
0.47	±5%	K	32.0	18.0	9.0	27.5	0.8	C42Q2474KBE****+++
0.56	±5%	K	32.0	20.0	11.0	27.5	0.8	C42Q2564KBE****+++
0.56	0 ~ +10%	K	32.0	20.0	11.0	27.5	0.8	C42Q2564NBE****+++
0.60	±5%	K	32.0	20.0	11.0	27.5	0.8	C42Q2604KBE****+++
0.68	±5%	K	32.0	20.0	11.0	27.5	0.8	C42Q2684KBE****+++
0.68	0 ~ +10%	K	32.0	20.0	11.0	27.5	0.8	C42Q2684NBE****+++
0.82	±5%	K	32.0	22.0	13.0	27.5	0.8	C42Q2824KBE****+++
1.0	±5%	K	32.0	22.0	13.0	27.5	0.8	C42Q2105KBE****+++
1.2	±5%	K	32.0	28.0	14.0	27.5	0.8	C42Q2125KBE****+++
1.5	±5%	K	32.0	28.0	14.0	27.5	0.8	C42Q2155KBE****+++
1.8	±5%	K	32.0	30.0	16.0	27.5	0.8	C42Q2185KBE****+++
2.2	±5%	K	32.0	33.0	18.0	27.5	0.8	C42Q2225KBE****+++

备注：1. “–”表示容量偏差。 “–”=capacitance tolerance code, K=±10%, M=±20%
2. “****”表示引线形状和包装代码（见table 1）。 “****”=lead form and packing code（refer to table 1）
3. 380Vac电源场合建议使用MKP65。详细请与技术人员联系。
If used in the 380Vac ,Pls refer to MKP65 . Pls contact our technical engineer for more details.